San Antonio Breast Cancer Symposium® - December 8-12, 2020 • Abstract #322

***Eflapegrastim is an investigational drug not approved by the FDA**

SPECTRUM® PHARMACEUTICALS
Redefining Cancer Care

Hanmi

Open-Label, Phase 1 Study to Evaluate Duration of Severe Neutropenia After the Same-Day, Varying Dosing Time Schedules of Eflapegrastim* Administration in Patients with Breast-Cancer Receiving Docetaxel and Cyclophosphamide (NCT04187898)

Lee S. Schwartzberg[1], Jawad Francis[2], Hlalah Osama[3], Manuel Modiano[4], Jayaram Bharadwaj[5], Shanta Chawla[6], Gajanan Bhat[6], Francois Lebel[6] and Nishan Tchekmedyian[7]

[1]West Cancer Center, Germantown, TN; [2]Mercy Health Youngstown, Youngstown, OH; [3]Bond & Steele Clinic, P.A., Winter Haven, FL; [4]ACRC/Arizona Clinical Research Center, Tucson, AZ; [5]Pacific Cancer Medical Center, Inc., Anaheim, CA; [6]Spectrum Pharmaceuticals, Inc, Irvine, CA; [7]Pacific Shores Medical Group, Long Beach, CA

INTRODUCTION

- As a standard of practice, G-CSF products require administration 24 hours after chemotherapy
- Eflapegrastim (ROLONTIS®) is a long-acting granulocyte-colony stimulating factor (G-CSF), consisting of a recombinant human G-CSF analog conjugated to a human IgG4 Fc fragment via a short polyethylene glycol linker. Eflapegrastim is not a biosimilar and represents the first long-acting myeloid growth factor that is the subject of a pending innovator biologics license application in more than 18 years
- In two Phase 3 studies that randomized a total of 643 patients with early-stage breast cancer (ESBC) to either eflapegrastim (3.6 mg GCSF n=314) or pegfilgrastim (6 mg G-CSF n=329) given ~ 24 hours after docetaxel and cyclophosphamide (TC) administration, the duration of severe neutropenia (DSN) was statistically noninferior in patients treated with eflapegrastim compared to pegfilgrastim, despite eflapegrastim being given at 60% of the G-CSF dose of pegfilgrastim[1,2]
- In preclinical studies with chemotherapy-induced neutropenic rats compared to pegfilgrastim (Neulasta®), eflapegrastim showed approximately 3-fold higher exposure in serum, and higher exposure in bone marrow, at similar doses[3]
  - The duration of neutropenia (DN) with eflapegrastim was shown to be significantly shorter than with pegfilgrastim when administered on either the same day or 24 hours post-chemotherapy
  - Additionally, DN with eflapegrastim was similar regardless of whether it was administered on the same day as chemotherapy or 24 hours post-chemotherapy
- Preclinical and clinical results suggest that the increased activity of eflapegrastim may provide effective prophylaxis against chemotherapy-induced neutropenia when administered on the same day as chemotherapy

OBJECTIVES

- To assess the feasibility of eflapegrastim dosing on the same-day as docetaxel cyclophosphamide (TC) in patients receiving TC for treatment of ESBC
- Dose schedule finding assessment of eflapegrastim administration at either 0.5 hours, 3 hours, or 5 hours from the end of TC administration

STUDY DESIGN

- Phase 1, open-label, multi-center trial
- Intravenous (IV) administration of TC on Day 1 of each cycle will be as follows:
  - Docetaxel 75 mg/m² IV, infusion time per institution's SOC
  - Cyclophosphamide 600 mg/m² IV, infusion time per institution's SOC
  - Patients may receive premedications for chemotherapy prophylaxis according to institutional standard of care (SOC).
- 13.2 mg/0.6 mL (3.6 mg G-CSF) fixed dose eflapegrastim administered subcutaneously (SC) at 0.5, 3 or 5 hours after TC
- Blood for CBC and PK analysis will be drawn before TC dose on Day 1 and post eflapegrastim dose at 1, 3, 6, and 8 hours (±15 min), 24, 48, and 72 hours (±2 hours), 144 hours (Day 7 ±1 day) and 192 hours (Day 9 ±1 Day), and on Cycle 2, Day 1 (Day 22) before TC dose.
- Peripheral blood CD34⁺ counts will be drawn daily from Day 2 to Day 10

Key Inclusion Criteria

- Histologically confirmed (operable stage I-IIIA) patients with ESBC
- Candidates for neoadjuvant or adjuvant TC chemotherapy
- ≥18 years of age
- ECOG ≤2
- Adequate hematological, renal, and hepatic function

Key Exclusion Criteria

- Recurrent/metastatic breast cancer
- Active concurrent malignancy
- Known sensitivity or previous reaction to E. coli-derived products, or any products to be administered during study
- Concurrent non-trial-related adjuvant cancer chemotherapy
- Exposure to a G-CSF agent within previous 3 months
- History of bone marrow or hematopoietic stem cell transplant
- Radiotherapy or surgery or investigational agent within 30 days
- Pregnant/breast-feeding

Figure 1. Study Schema

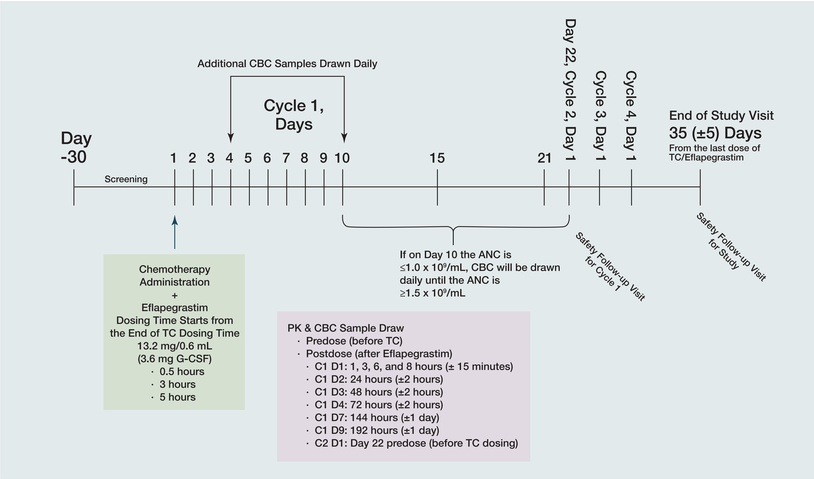

Endpoints

- Primary:
  - Duration of Grade 4 neutropenia (ANC <0.5×10⁹/L) in Cycle 1
- Secondary:
  - Incidence of Grade 4 neutropenia (ANC <0.5×10⁹/L) in Cycle 1
  - Time to recovery to ANC ≥1.5×10⁹/L in Cycle 1
  - Incidence of Grade 3 febrile neutropenia in Cycle 1 (ANC <1.0×10⁹/L and either a single temperature of >38.3°C (101.0°F) or a sustained temperature of ≥38.0°C (100.4°F) for more than 1 hour
  - Pharmacokinetics (PK) of eflapegrastim in Cycle 1
  - Incidence of neutropenic complications during Cycle 1
  - Safety
- Exploratory:
  - Peripheral blood CD34⁺

STATISTICAL METHODS

- Target accrual: 45 patients randomized 1:1:1 to 30 min, 3 hr and 5 hr dosing
- A sample size of 15 patients per dosing schedule arm was determined to provide adequate precision for the 95% CI of the DSN and secondary endpoints, including PK parameters
- The sample size produces a 2-sided 95% CI with a distance from the mean DSN to the limits that is equal to 0.554 using t-distribution when the estimated standard deviation is 1.0 days
- A safety evaluation will be performed once the first three patients in each arm have completed Cycle 1

CURRENT ENROLLMENT

- Enrollment began in April 2020
- 9 of 45 patients have been enrolled to date

REFERENCES

1. Schwartzberg LS, Bhat G, Peguero J, et al. Eflapegrastim, a Long-Acting Granulocyte-Colony Stimulating Factor for the Management of Chemotherapy-Induced Neutropenia: Results of a Phase III Trial. *The Oncologist*. 2020;25:1-9
2. Cobb PW, Moon YW, Mezei K, et al. A Comparison of Eflapegrastim to Pegfilgrastim in the Management of Chemotherapy-Induced Neutropenia in Patients with Early-Stage Breast Cancer Undergoing Cytotoxic Chemotherapy (RECOVER): A Phase 3 Study. Cancer Medicine. 2020;00:1–10. https://doi.org/10.1002/cam4.3227
3. Barrett JA, Choi J, Lakshmikanthan S, et al. Eflapegrastim Enhanced Efficacy Compared to Pegfilgrastim in Neutropenic Rats Supports Potential for Same-Day Dosing. *Exp Hematol*. 2020; https://doi.org/10.1016/j.exphem.2020.09.199

ACKNOWLEDGEMENTS

- This trial is being sponsored by Spectrum Pharmaceuticals, Inc
- Medical writing assistance was provided by Spectrum Pharmaceuticals Medical Affairs

***Eflapegrastim is an investigational drug not approved by the FDA**

This presentation is the intellectual property of the author/presenter.
Please email **shanta.chawla@sppirx.com** for permission to reprint and/or distribute.
Copies of this poster obtained through Quick Response (QR) Code are for personal use only and may not be reproduced without permission from the author of this poster.

RD-ROL-0027